# BD3B-G6

**BEFORE INSTALLATION REQUIREMENT:**

1. THE OUTLET (DRAINAGE) PIPE & WATER INLET MUST BE NEAR TO DISHWASHER.
2. THE DRAIN HOSE HOOK FROM THE GROUND MUST BE AT LEAST 300 MM ~ 500 MM.
3. CABINET CUT-OUT SIZE MUST BE READY BEFORE INSTALLATION
4. PREPARE A 13AMP POWER POINT INSIDE THE CABINET.
5. DO NOT PLACE ANY OBJECTS TO BLOCK THE VENTILATION OUTLET AT BOTTOM FRONT OF DISHWASHER.
6. IF THERE IS A BASE OF CABINET, IT MUST BE STRONG ENOUGH TO WITHSTAND MORE THAN 60KG.
7. RECOMMENDED TO PREPARE SKIRTING BOARD, IT MUST BE INSTALLED ACCORDING TO THE FIGURE 1.1

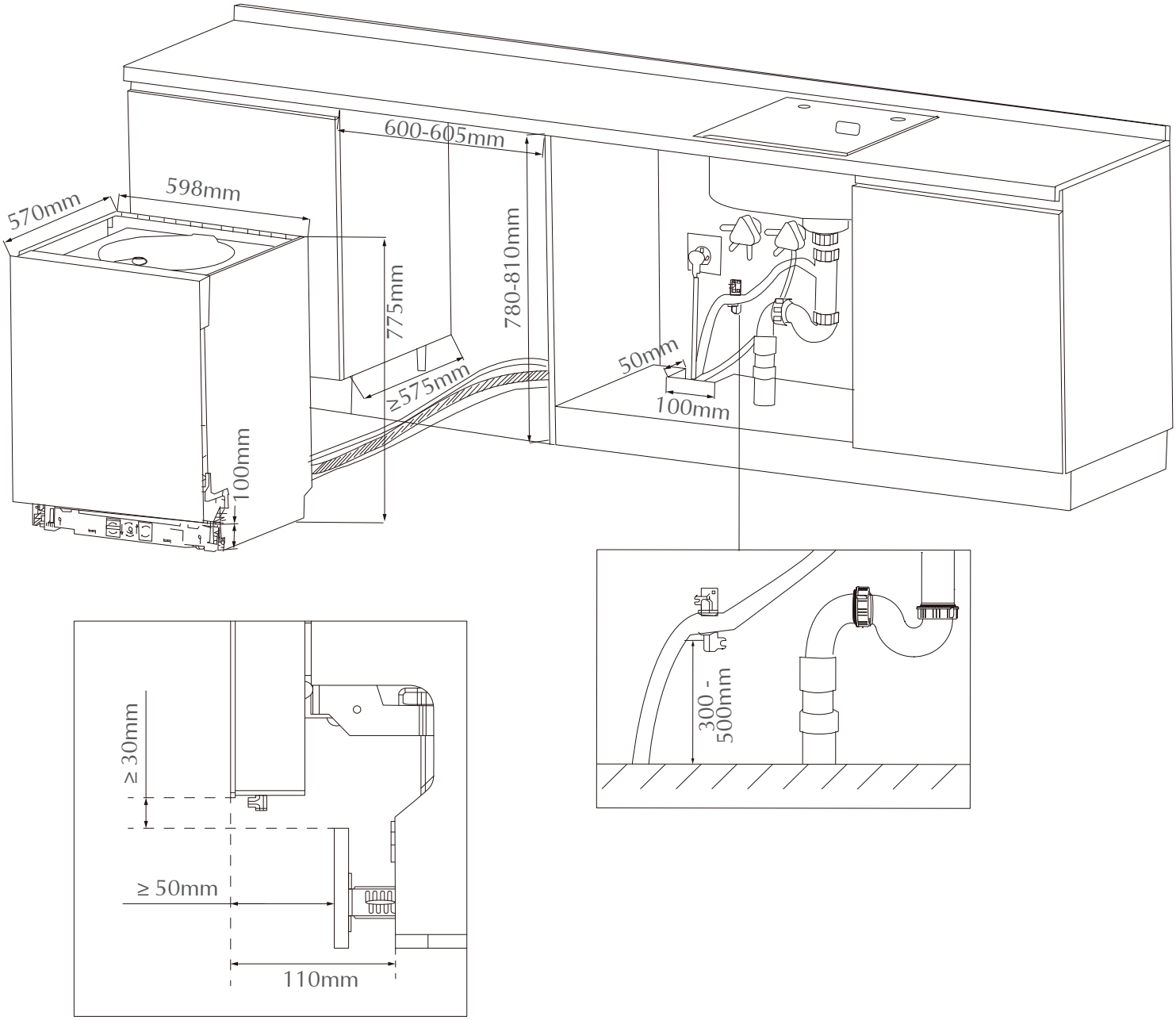


Figure 1.1