Hood

EMG9008-CR

Scan for Detailed Installation

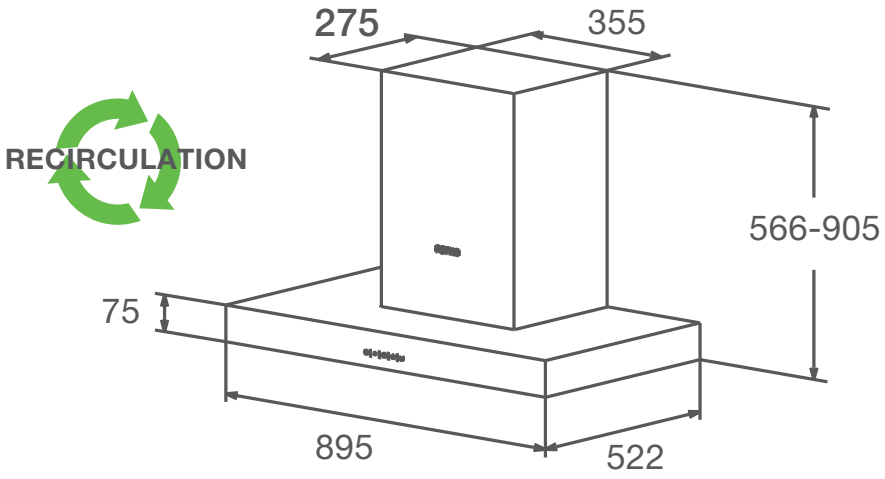

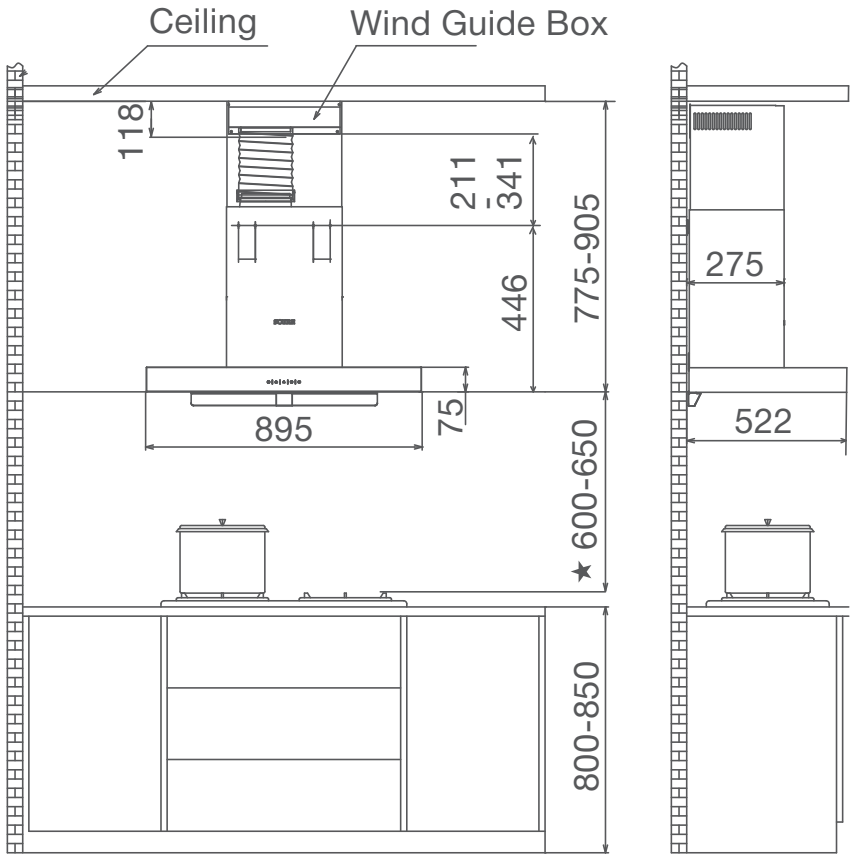

★ Distance is calculated from the pan support of hob